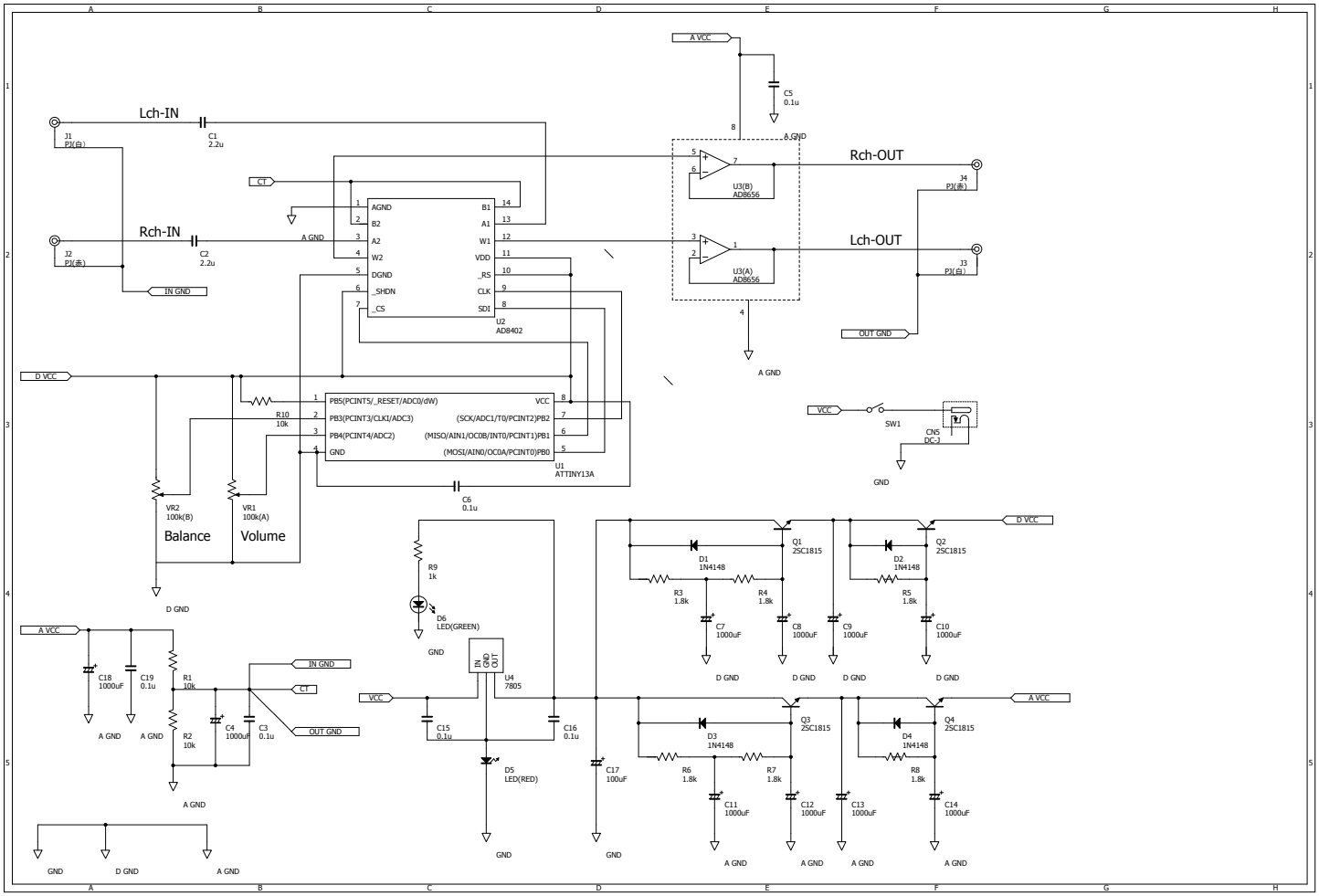
A VCC
C5
0.1u
A GND
Lch-IN
J1
PJ(白)
C1
2.2u
Rch-IN
J2
PJ(赤)
C2
2.2u
IN GND
CT
A GND
AGND
B2
A2
W2
DGND
_SHDN
_CS
B1
A1
W1
VDD
_RS
CLK
SDI
U2
AD8402
U3(B)
AD8656
U3(A)
AD8656
Rch-OUT
Lch-OUT
J4
PJ(赤)
J3
PJ(白)
OUT GND
D VCC
R10
10k
PB5(PCINT5/_RESET/ADC0/dW)
PB3(PCINT3/CLKI/ADC3)
PB4(PCINT4/ADC2)
GND
VCC
(SCK/ADC1/T0/PCINT2)PB2
(MISO/AIN1/OC0B/INT0/PCINT1)PB1
(MOSI/AIN0/OC0A/PCINT0)PB0
U1
ATTINY13A
C6
0.1u
VR2
100k(B)
VR1
100k(A)
Balance
Volume
D GND
VCC
SW1
CN5
DC-J
GND
R9
1k
D6
LED(GREEN)
GND
Q1
2SC1815
Q2
2SC1815
D1
1N4148
D2
1N4148
R3
1.8k
R4
1.8k
R5
1.8k
C7
1000uF
C8
1000uF
C9
1000uF
C10
1000uF
D GND
A VCC
C18
1000uF
C19
0.1u
R1
10k
R2
10k
C4
1000uF
C3
0.1u
IN GND
CT
OUT GND
A GND
U4
7805
IN
GND
OUT
C15
0.1u
C16
0.1u
D5
LED(RED)
C17
100uF
Q3
2SC1815
Q4
2SC1815
D3
1N4148
D4
1N4148
R6
1.8k
R7
1.8k
R8
1.8k
C11
1000uF
C12
1000uF
C13
1000uF
C14
1000uF
A GND
GND
D GND
A GND